THIS DRAWING IS UNPUBLISHED. RELEASED FOR PUBLICATION -,- .
© COPYRIGHT - BY TYCO ELECTRONICS CORPORATION. ALL RIGHTS RESERVED.

LOC	DIST
FT	0

REVISIONS

P	LTR	DESCRIPTION	DATE	DWN	APVD
	N	REVISED PER ECO-07-004106	2/22/07	SS	DC

1. ACCEPTS .062±.007 PRINTED CIRCUITS BOARD.
2. MAX ALLOWABLE BOW TO BE .003 PER INCH OF HOUSING.
3. 1-380914-0 AND 1-380914-2 IS ALLOWED TO USE ITEM 7 AND 8 AS SUBSTITUTES FOR ITEM 5 AND 6.

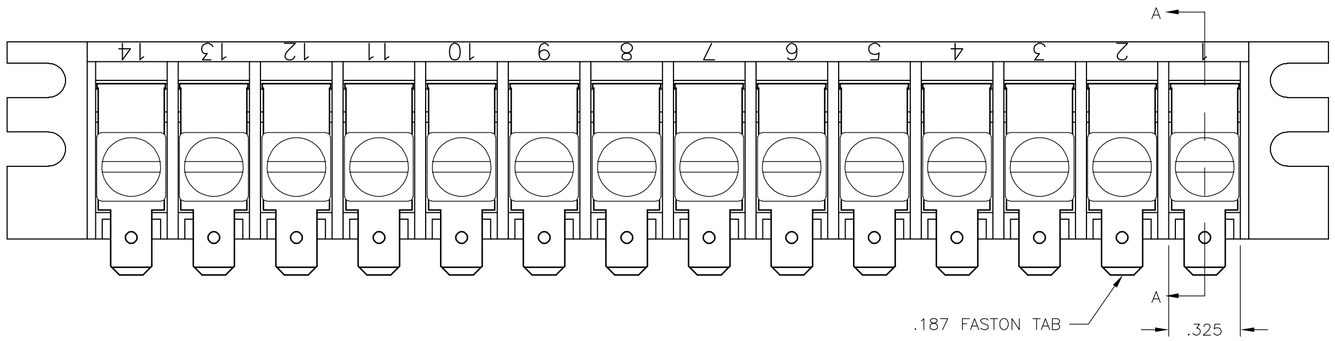

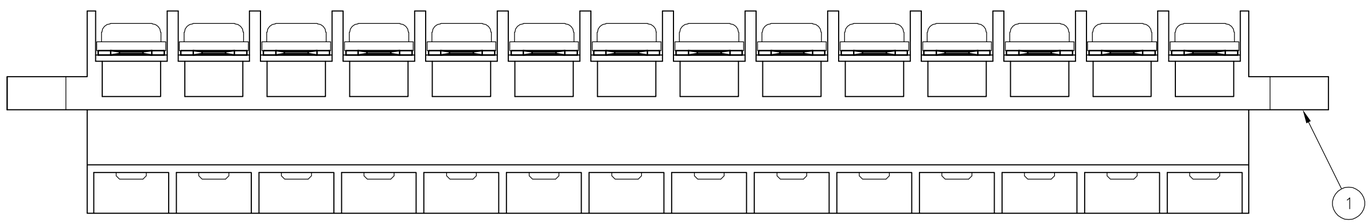

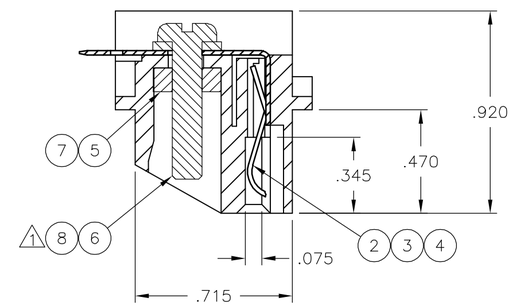

SECTION A-A

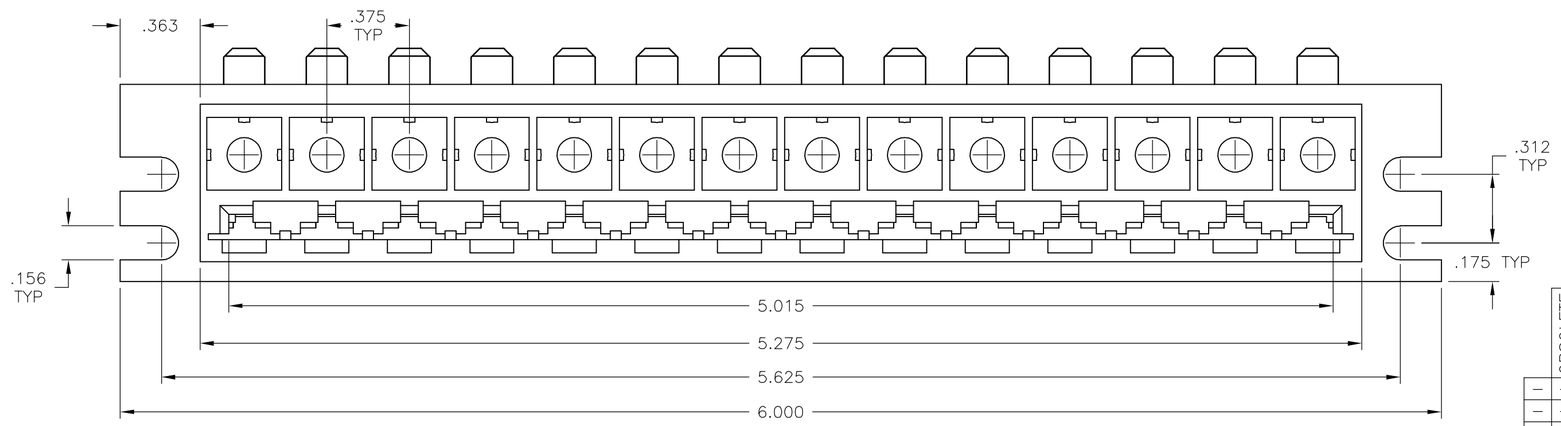

		OBSOLETE					
–	–	–	14	14	6-32, STEEL, GOLD PLATE	CLAMP ASSY	8
–	–	–	14	14	6-32, STEEL, ZINC NON-HEXAVALENT	NUT	7
14	14	14	–	–	6-32, STEEL, GOLD PLATE	CLAMP ASSY	6
14	14	14	–	–	6-32, STEEL, ZINC HEXAVALENT	NUT	5
14	–	–	14	–	.020 PH BRZ, GOLD	CONTACT	4
–	14	–	–	–	.020 PH BRZ, TIN	CONTACT	3
–	–	14	–	14	.020 PH BRZ, GOLD FLASH	CONTACT	2
1	1	1	1	1	POLYCARBONATE, GRAY	HOUSING	1
-12	-11	-10	-2	-1	MATERIAL	DESCRIPTION	ITEM NO.

THIS DRAWING IS A CONTROLLED DOCUMENT.

DIMENSIONS: INCHES

TOLERANCES UNLESS OTHERWISE SPECIFIED:
0 PLC ± –
1 PLC ± –
2 PLC ± .02
3 PLC ± .005
4 PLC ± –
ANGLES ± 0°30'

MATERIAL –
FINISH –

DWN S SCHLEGEL 2/22/07
CHK D COURS 2/22/07
APVD D COURS 2/22/07
PRODUCT SPEC —
APPLICATION SPEC —
WEIGHT —

tyco Electronics
Tyco Electronics Corporation
Harrisburg, PA 17105-3608

NAME
EDGE CONNECTOR ASSY
14 CIRCUIT MULTI-TAP
–

SIZE	CAGE CODE	DRAWING NO	RESTRICTED TO
A2	00779	C-380914	—

CUSTOMER DRAWING | SCALE 2:1 | SHEET 1 OF 1 | REV N

380914